FLARE

Open Deeply Programmable Network Node Architecture

FLARE Node Development

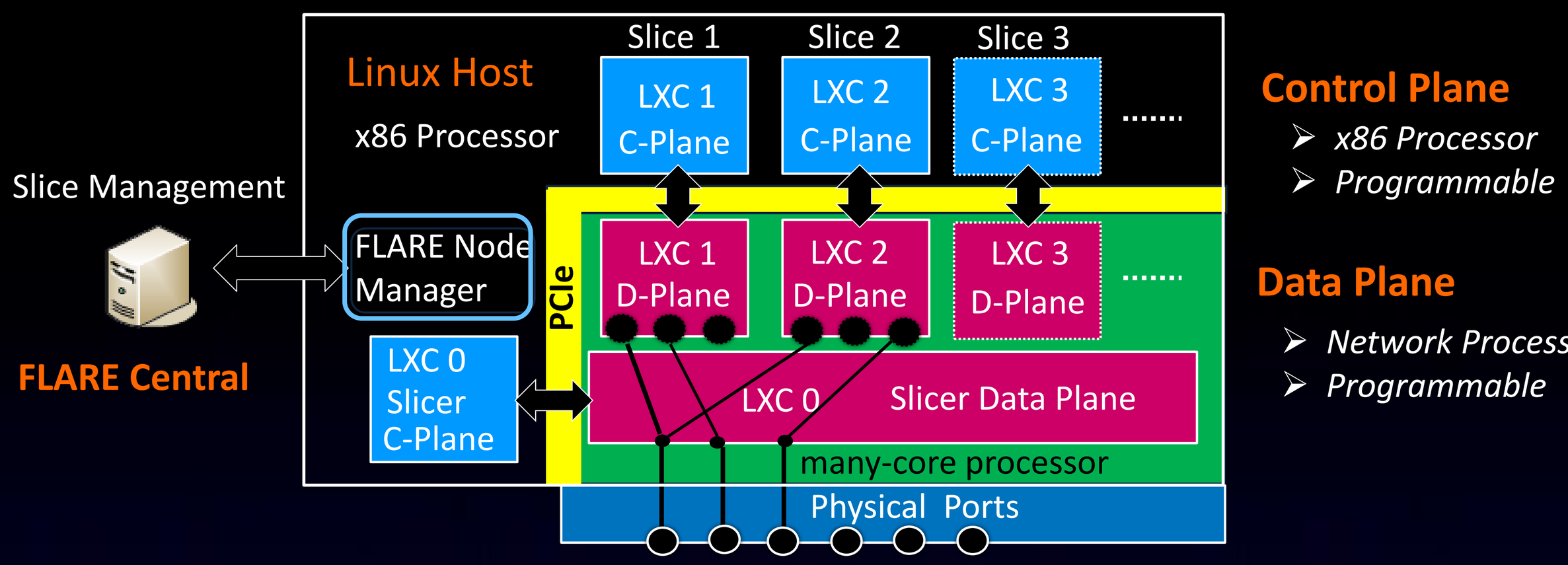

FLARE Node Architecture

Flare Board Rev.1.3(New)

Network Processor PCIe Card

- 36-core TILE-Gx8036 Network Processor
- GbE: 8 ports and 10GbE SFP+: 2 ports
- Up to 16GB memory
- PCI Express 2.0 : x8

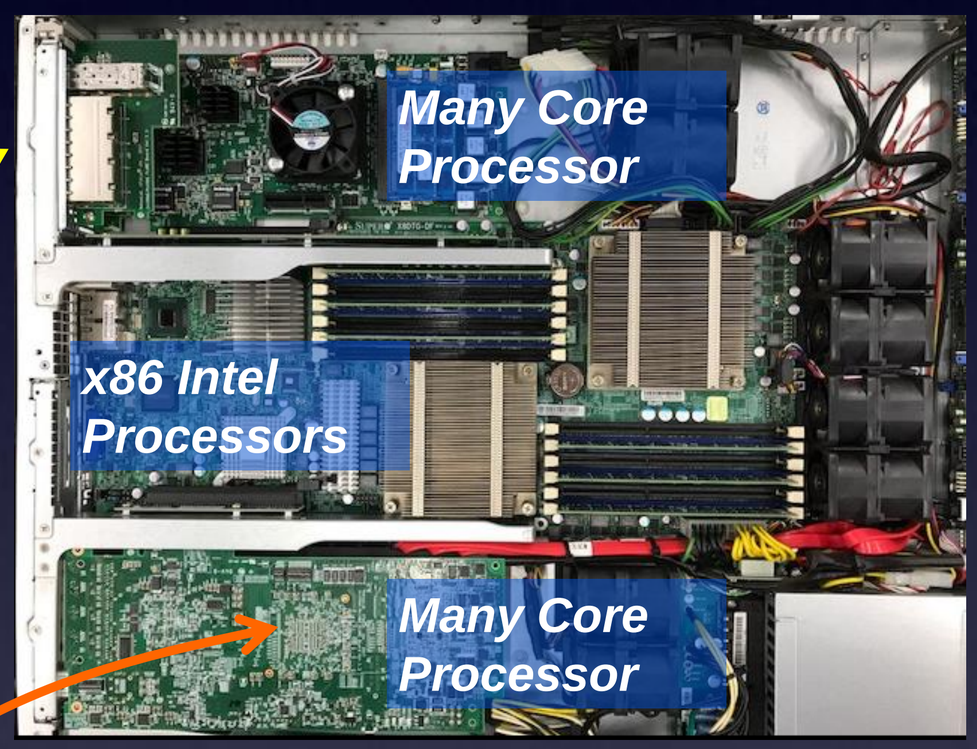

Instalation in 1U IA Server

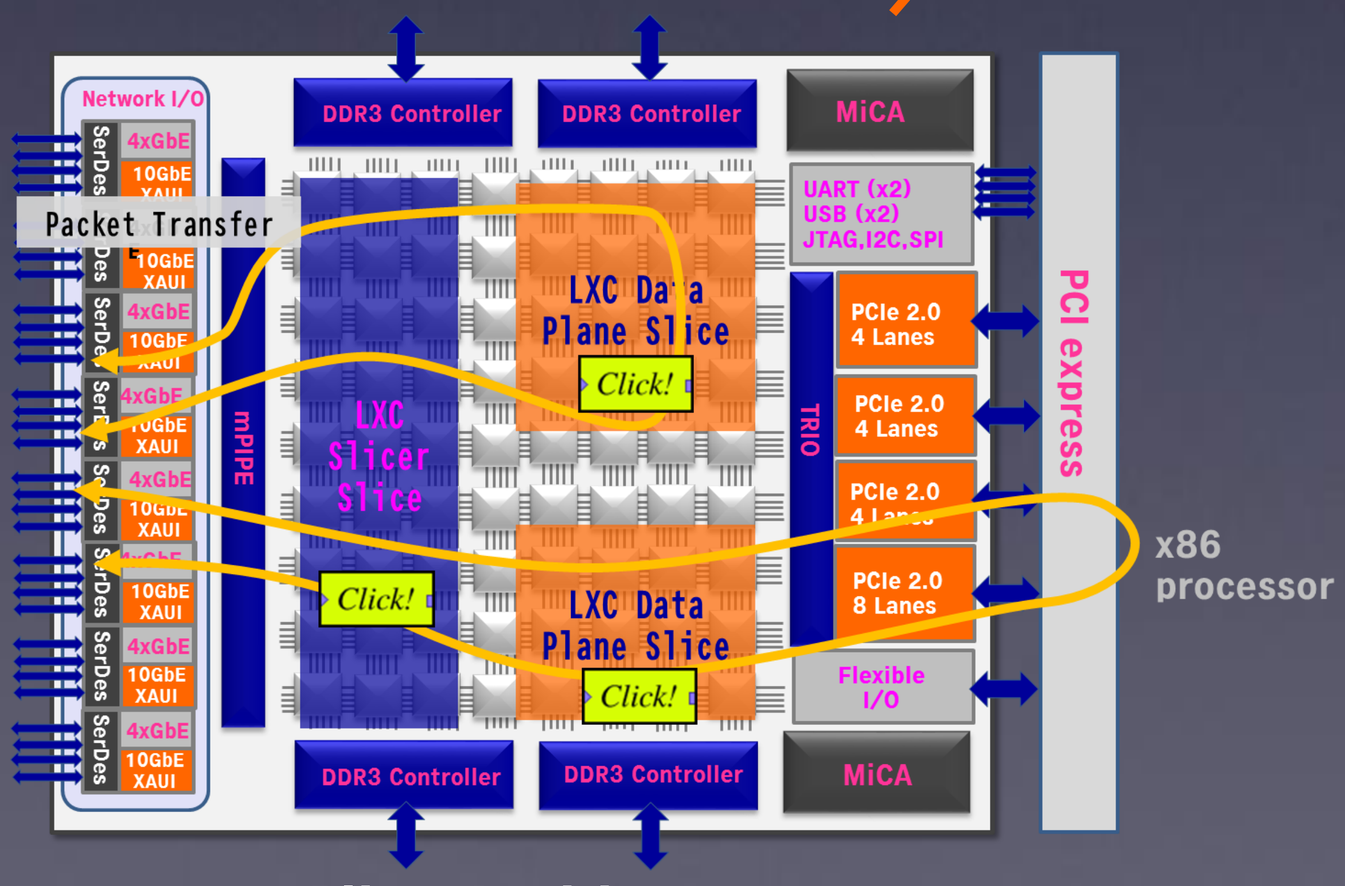

Slice Architecture

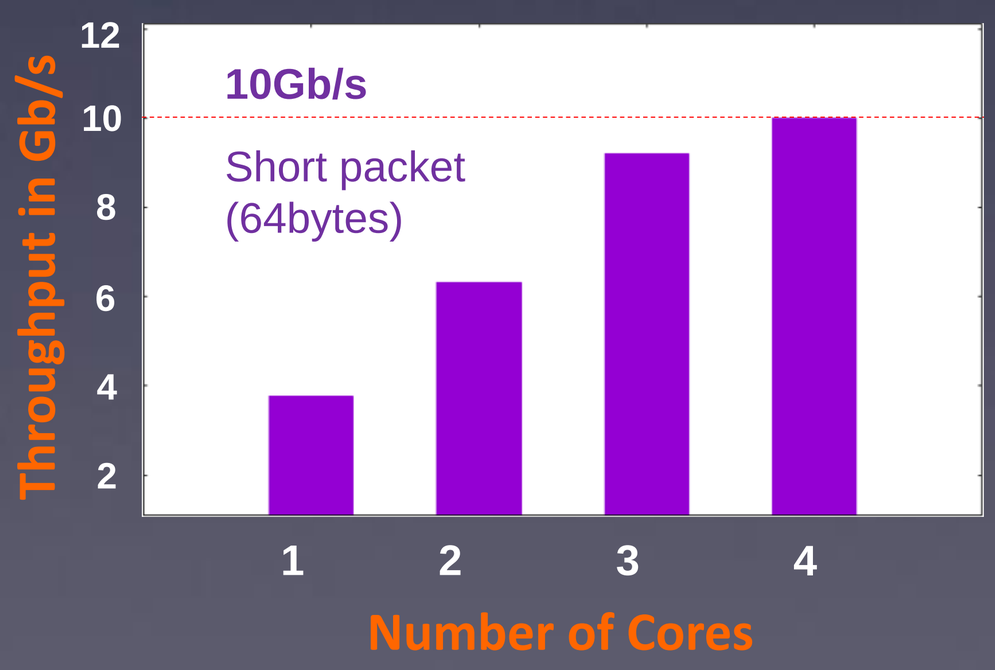

Packet I/O Performance

To use Manycore Network Processor: TILE GX72

Acknowledgment : This research is supported by MIC SCOPE

THE UNIVERSITY OF TOKYO

FLARE

Open Deeply Programmable Network Node Architecture

LTE Softwarization on FLARE

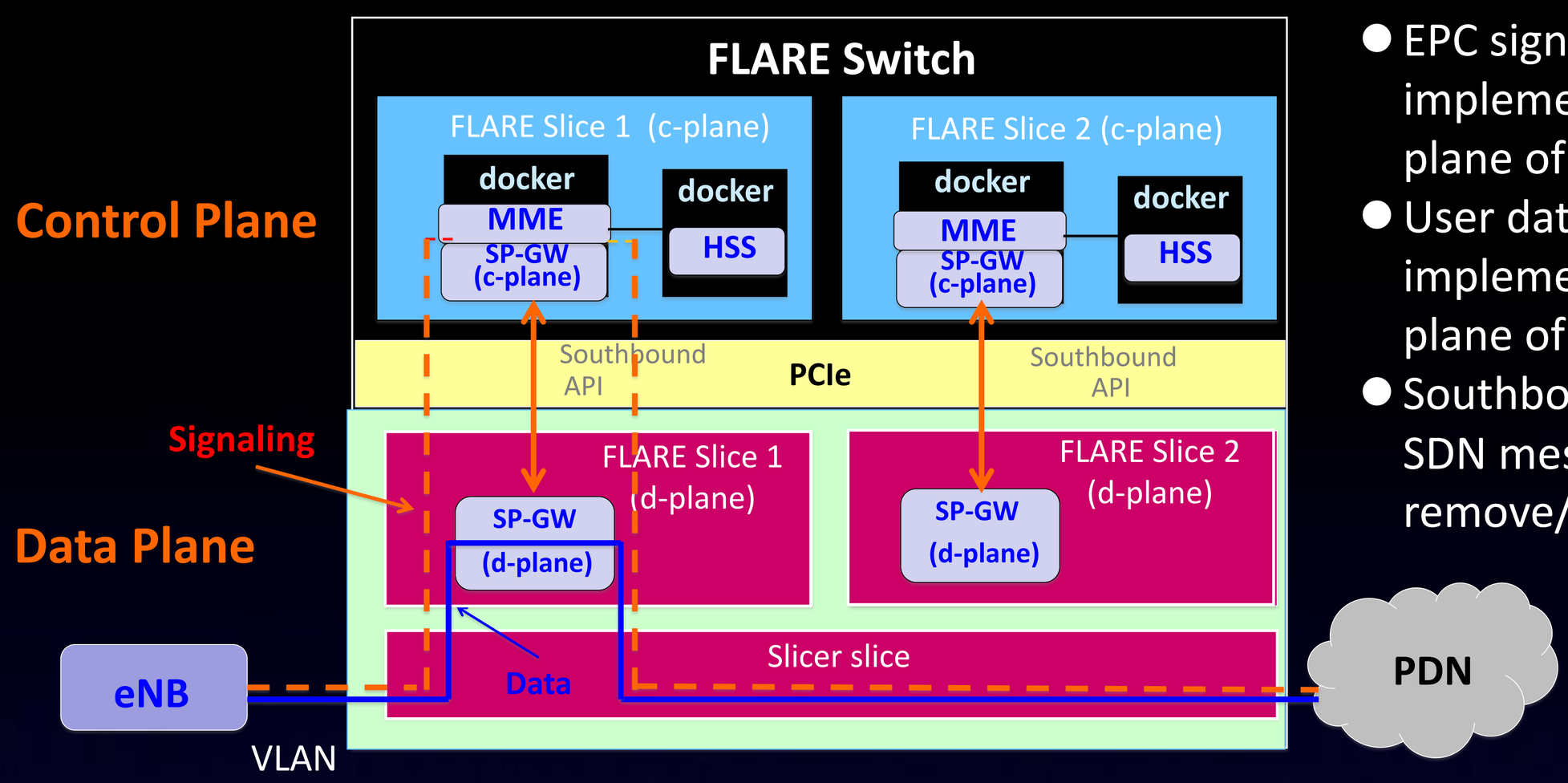

- EPC signaling and HSS implemented by dockers in c-plane of FLARE slice
- User data processing implemented by Click in d-plane of FLARE slice
- Southbound API provides SDN messages to create/ remove/update GTP-U tunnel

Slicing EPC on FLARE

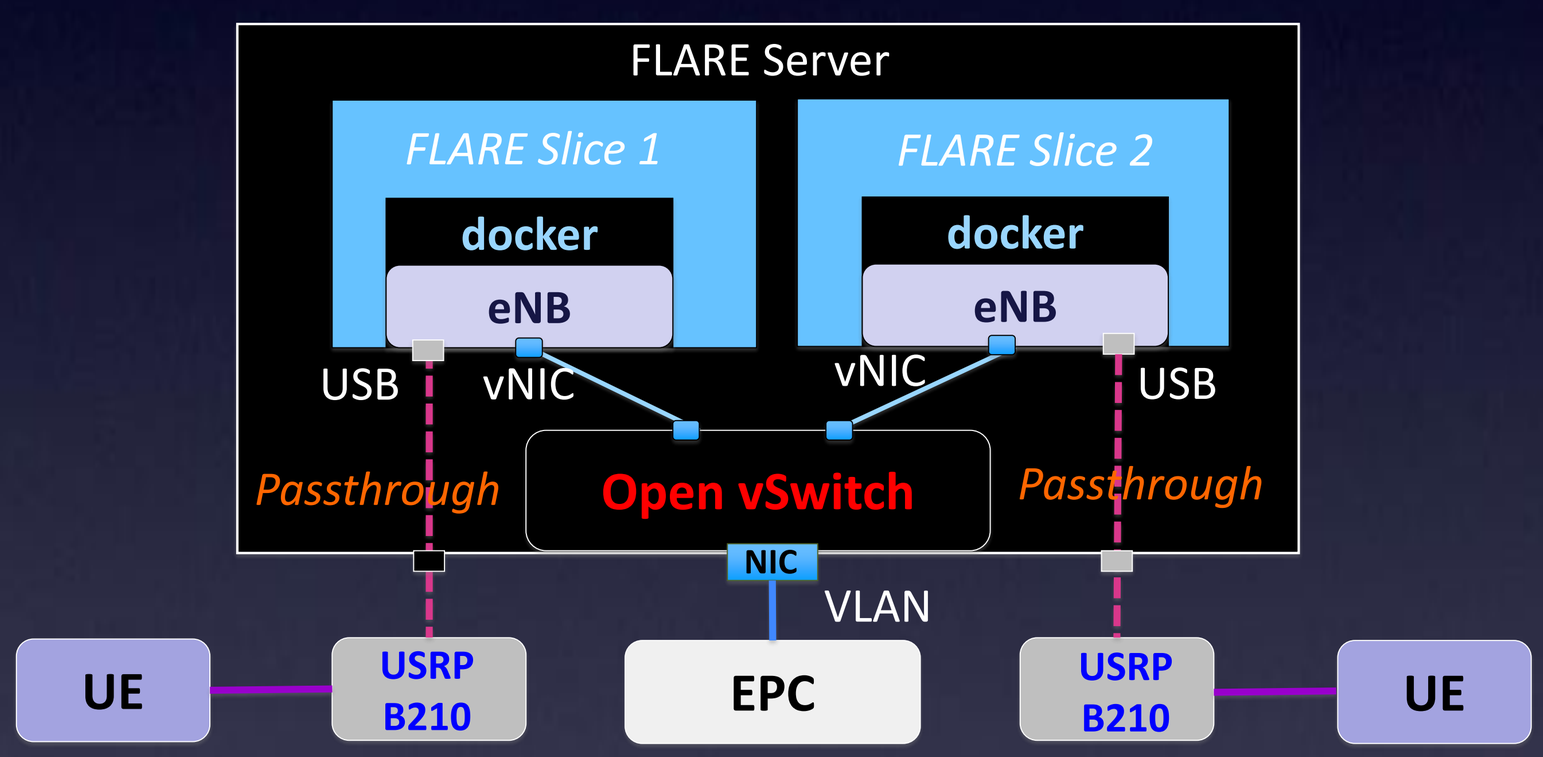

Slicing eNB on FLARE

Universal Soft Radio Peripheral (USRP)

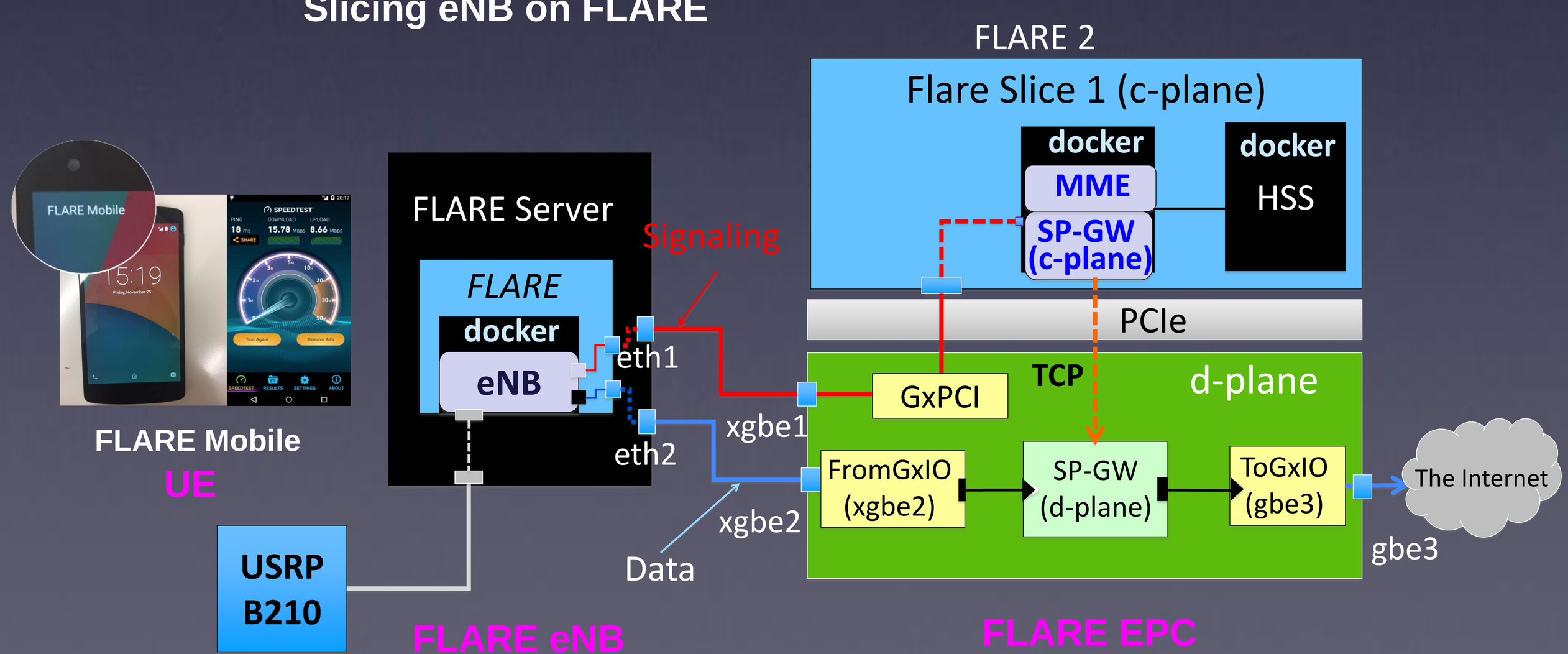

Demo Setup for LTE Softwarization in FLARE Slice

Acknowledgment : This research is supported by MIC SCOPE

THE UNIVERSITY OF TOKYO