FLARE

Open Deeply Programmable Network Node Architecture

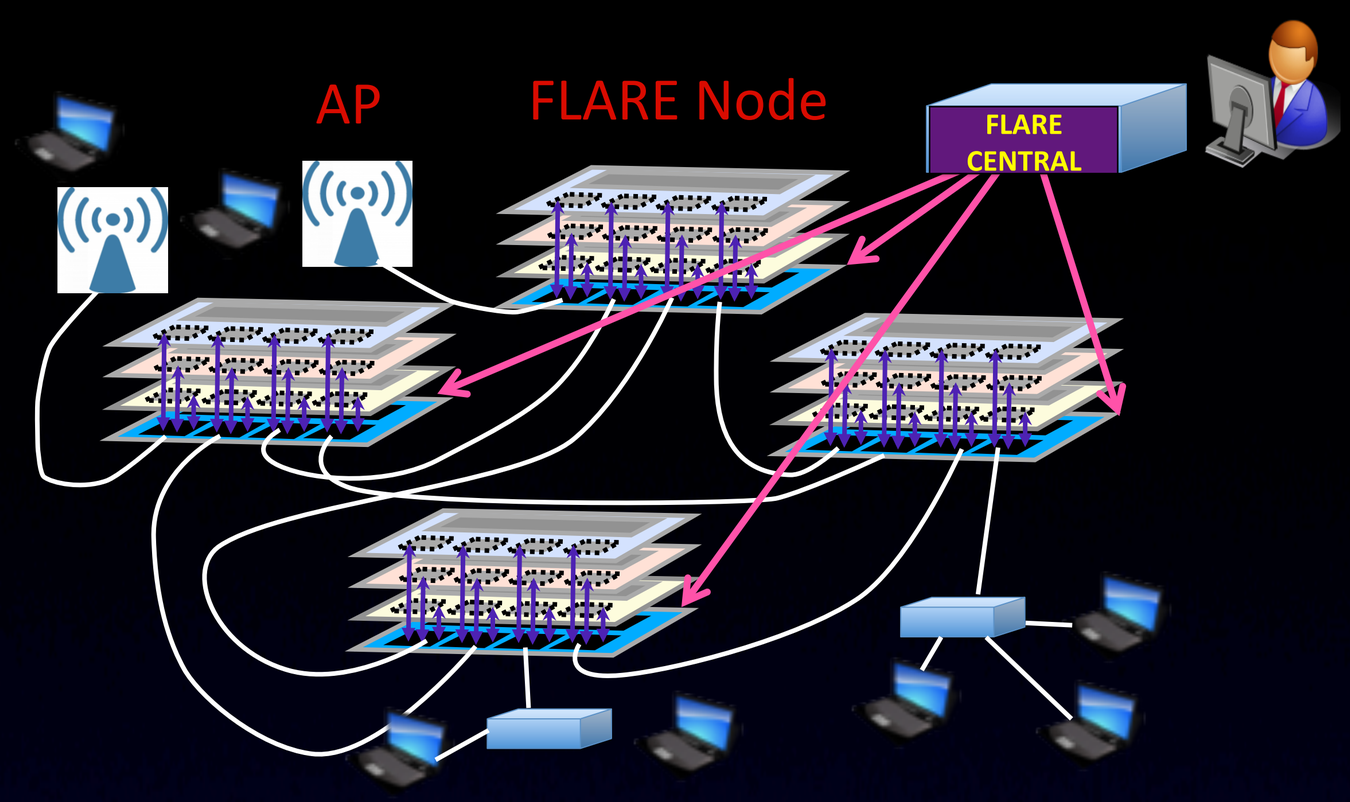

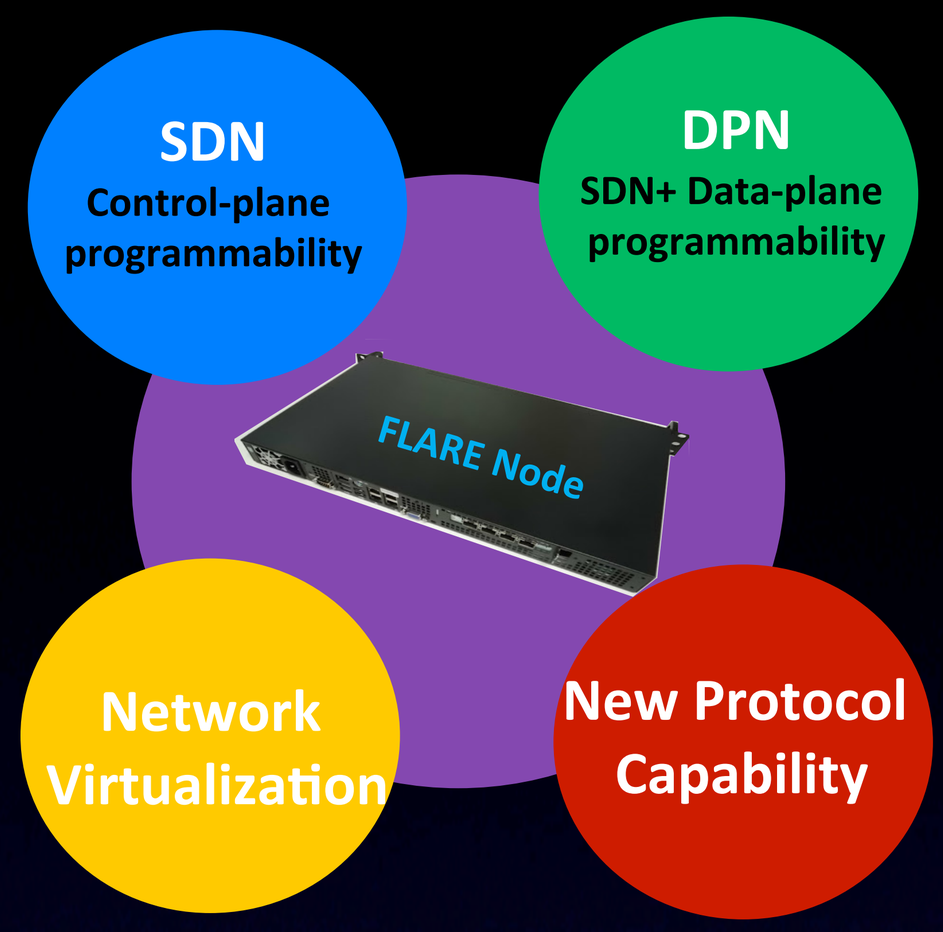

FLARE Deeply Programmable Network

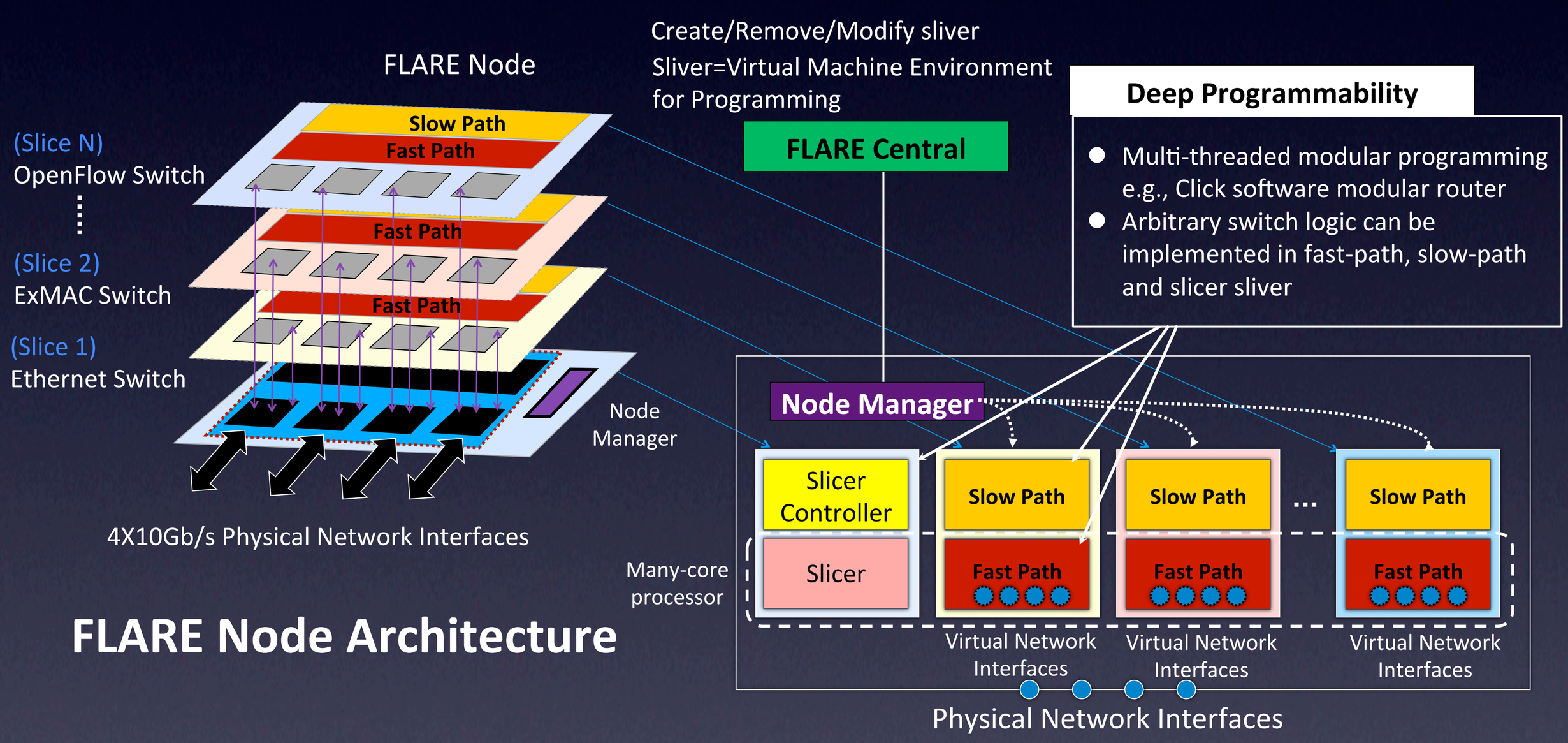

FLARE Node Architecture

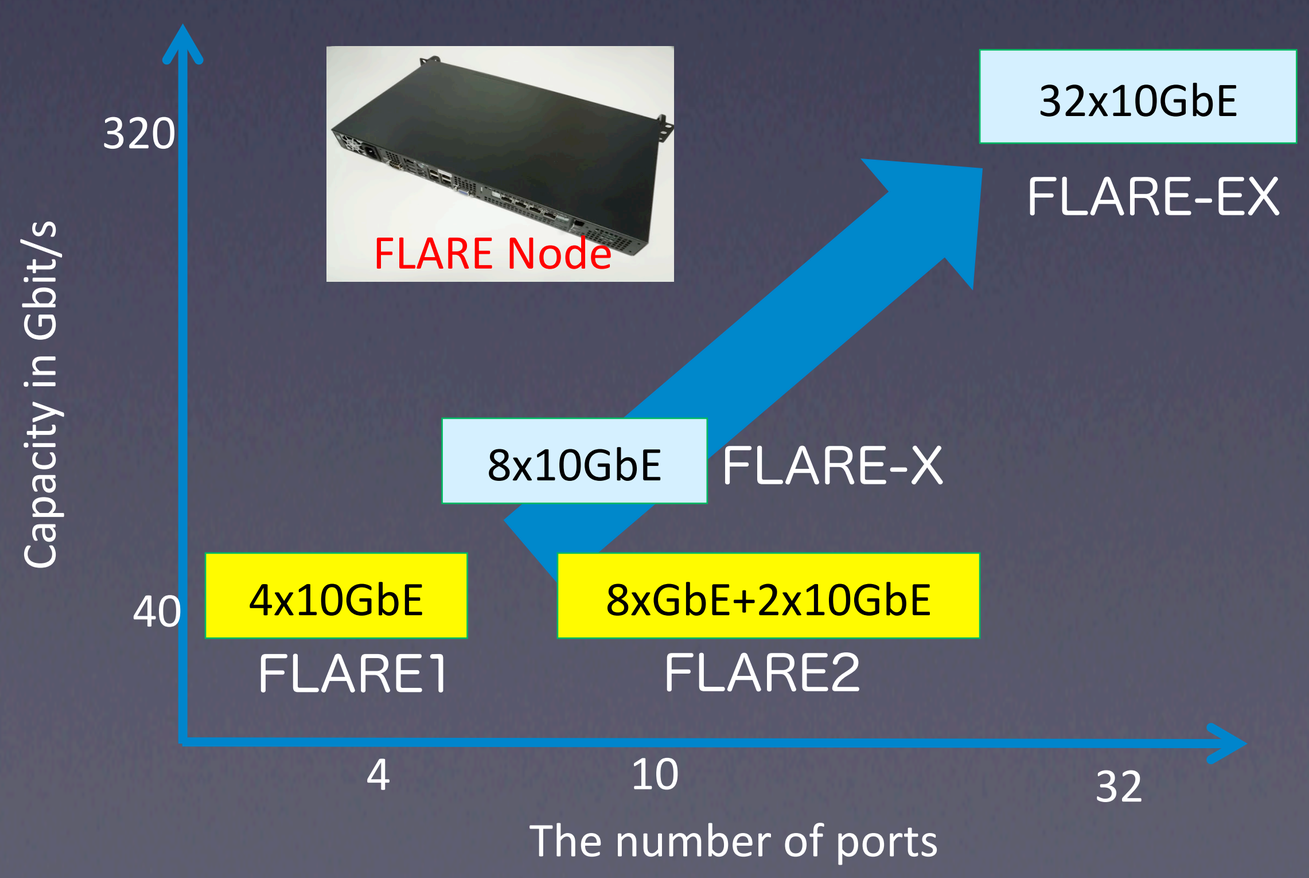

FLARE Node Roadmap

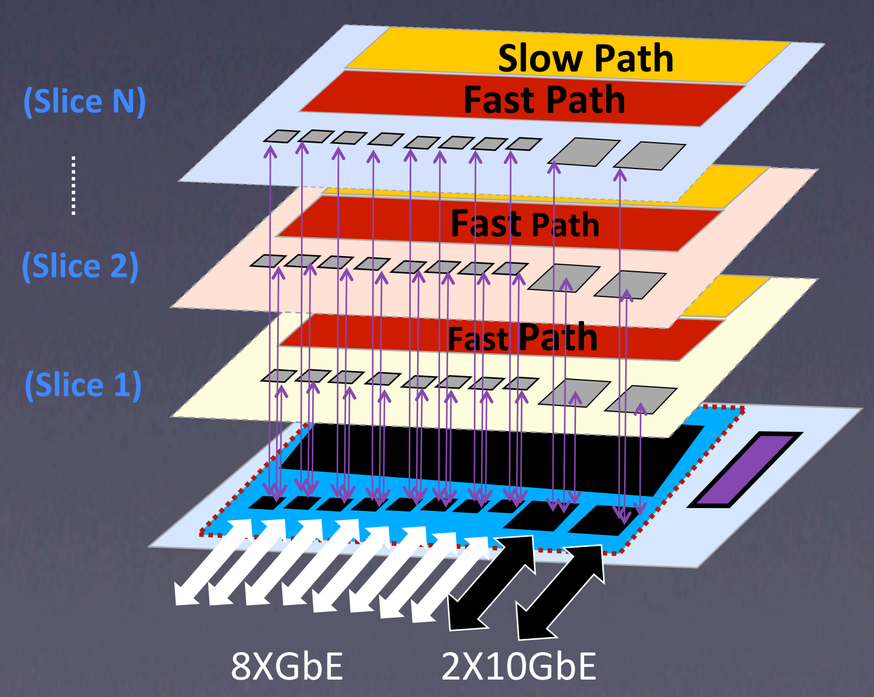

FLARE2 Node

THE UNIVERSITY OF TOKYO

Acknowledgment : This research is supported by NICT

FLARE

Open Deeply Programmable Network Node Architecture

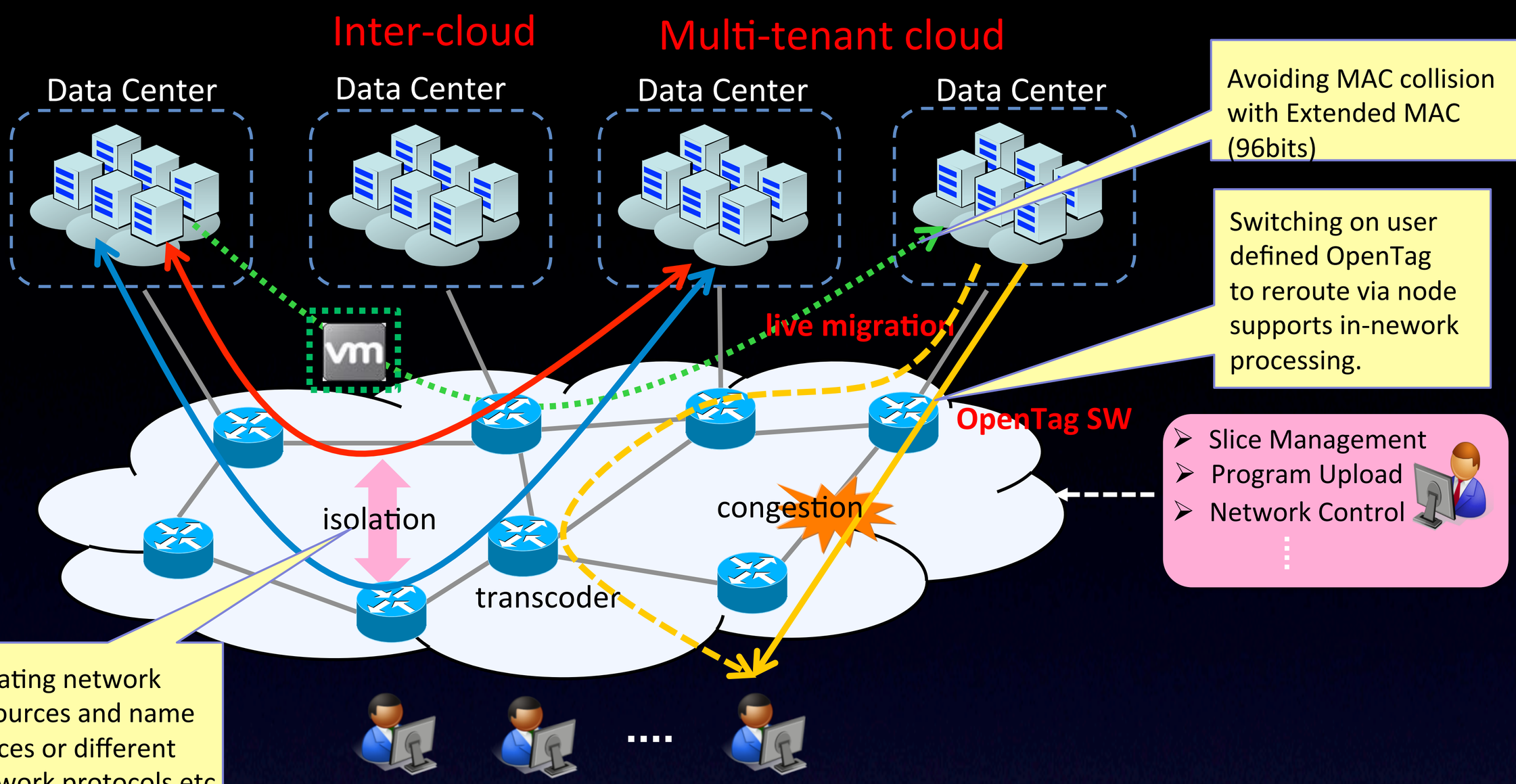

DPN for Cloud Computing

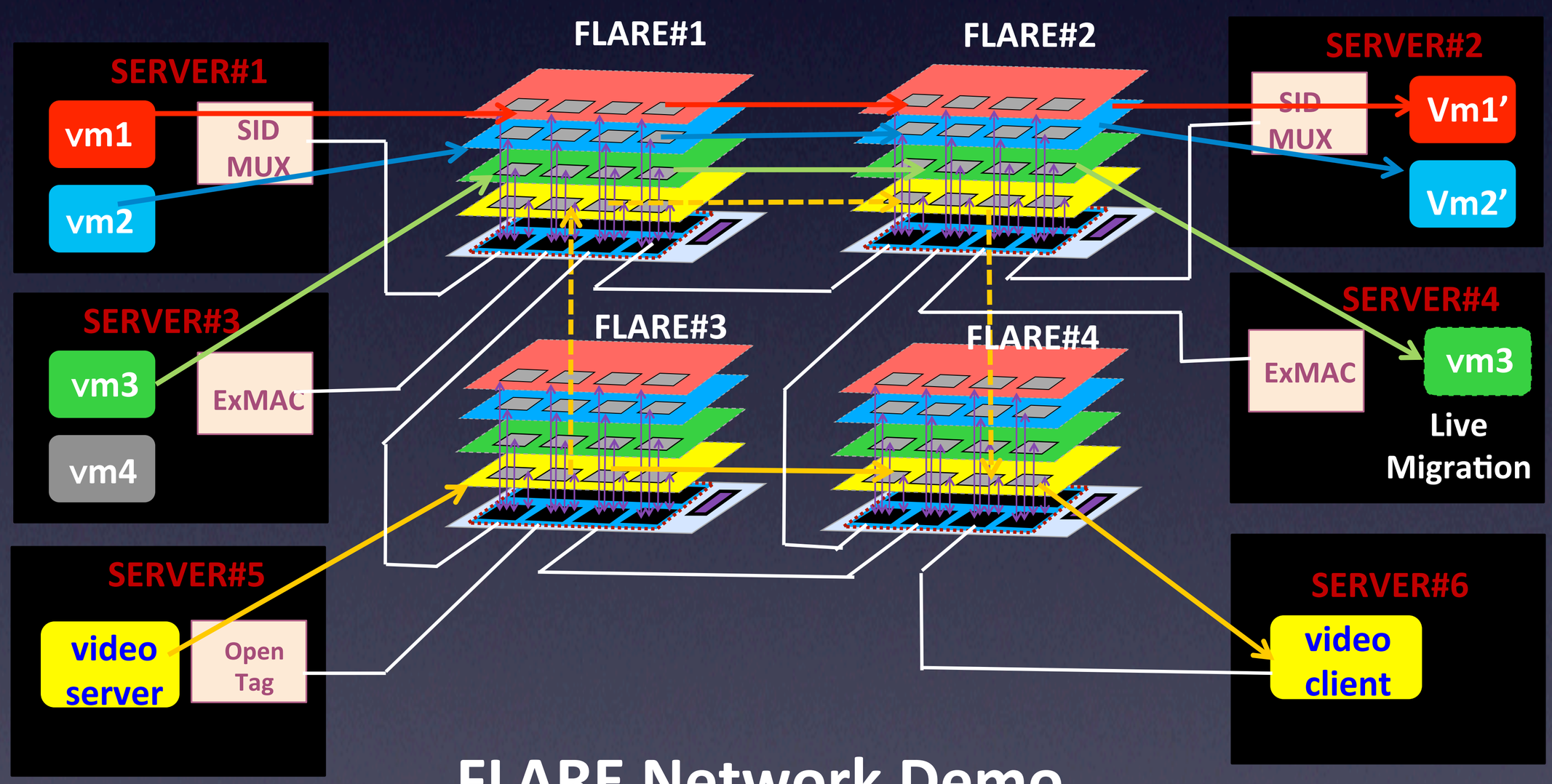

FLARE Network Demo

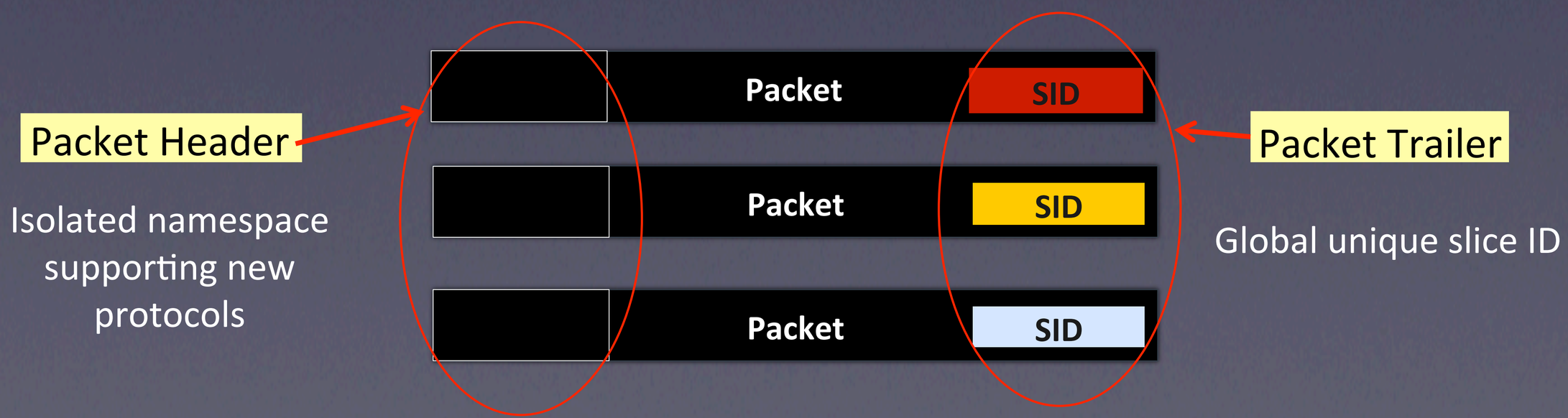

FLARE Packet Format

THE UNIVERSITY OF TOKYO

Acknowledgment : This research is supported by NICT

FLARE

Open Deeply Programmable Network Node Architecture

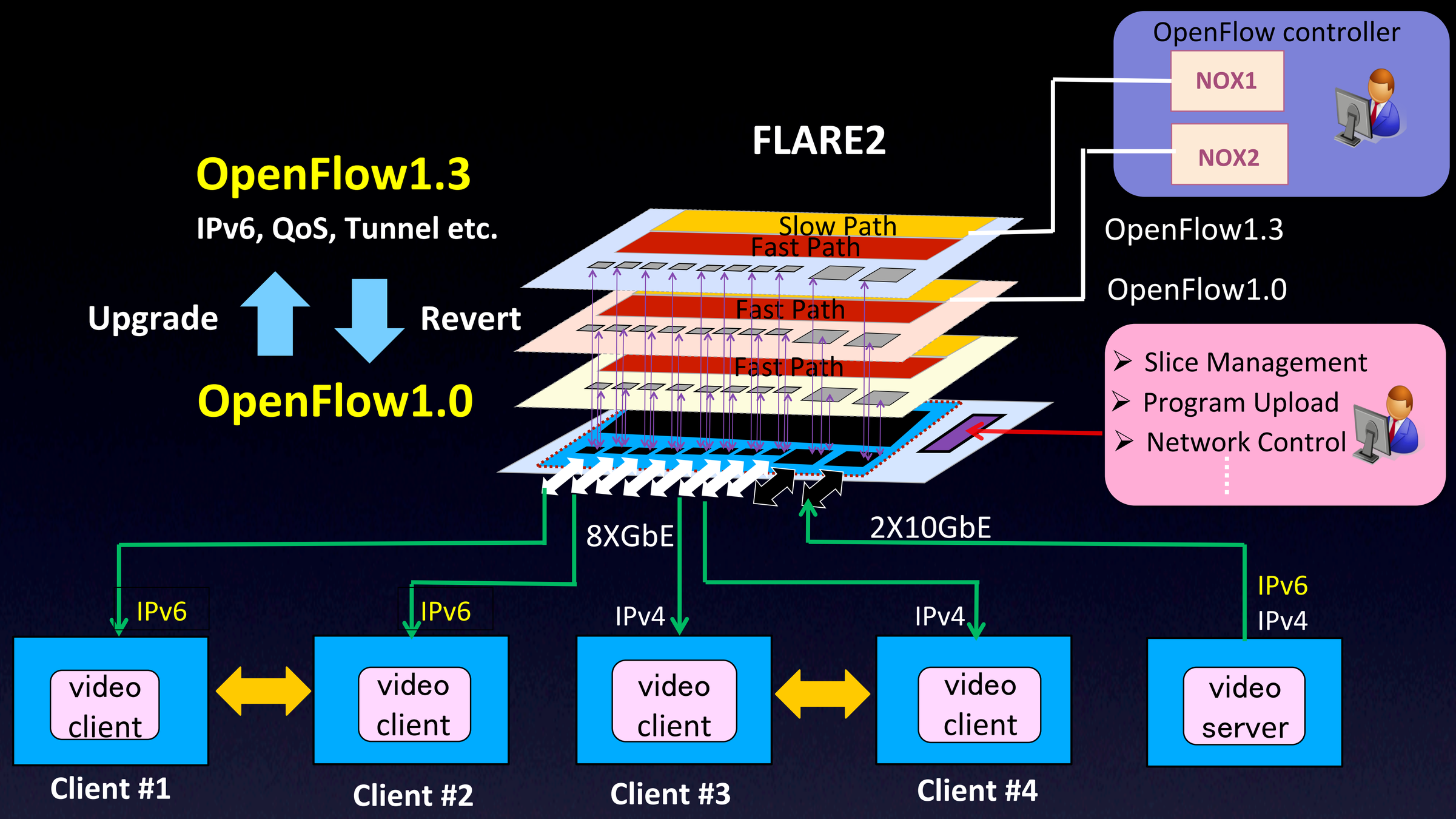

OpenFlow Implementation in FLARE Slices

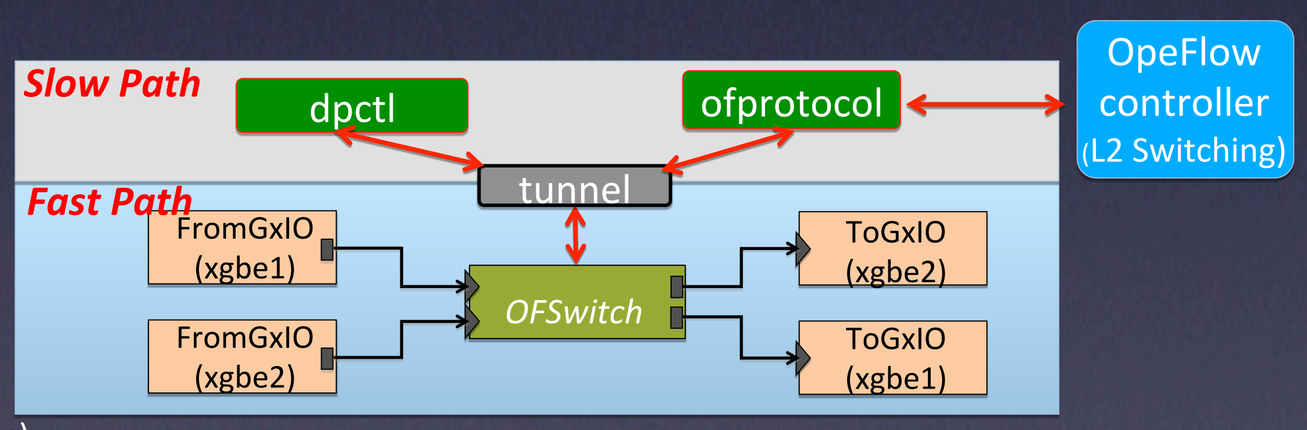

Switching Performance

Performance of OpenFlow Switching

- Various protocols support

  FLARE supports developing, deploying, and experimenting with new version of protocols such as OpenFlow spec v1.3 with flexible deep programmability and high performance in the same platform.

- Update and reversion

  FLARE supports multiple slices in an isolated manner. Sliced networks transparently enable updating or reverting of network protocols .

THE UNIVERSITY OF TOKYO

Acknowledgment : This research is supported by NICT

BeaconCast on WiVi

WiVi: WiFi Virtualization infrastructure with deep programmability
BeaconCast : Information Push via SSIDs in WiFi beacons

Goal : Slicing a Wi-Fi access point to add additional first-mile/last mile services for smartphones and handsets besides regular WiFi access services

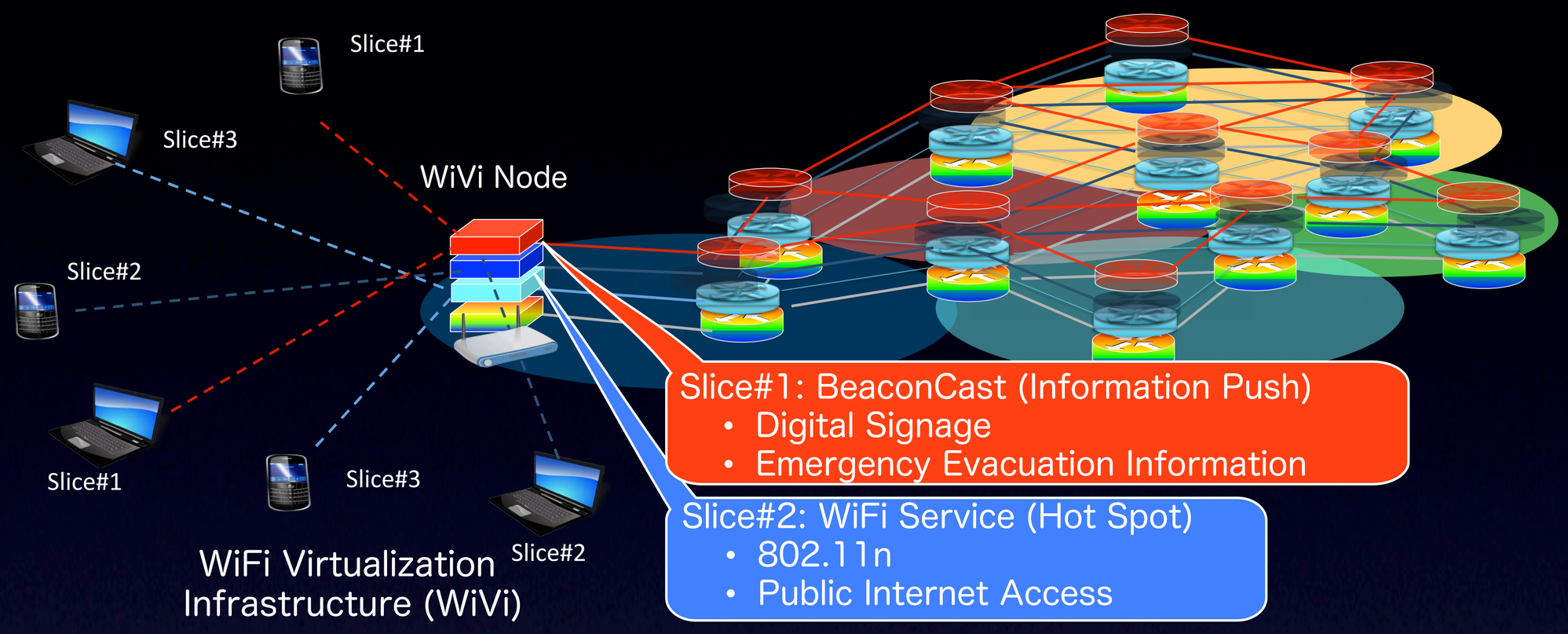

WiFi Access Point Virtualization (WiVi Node)

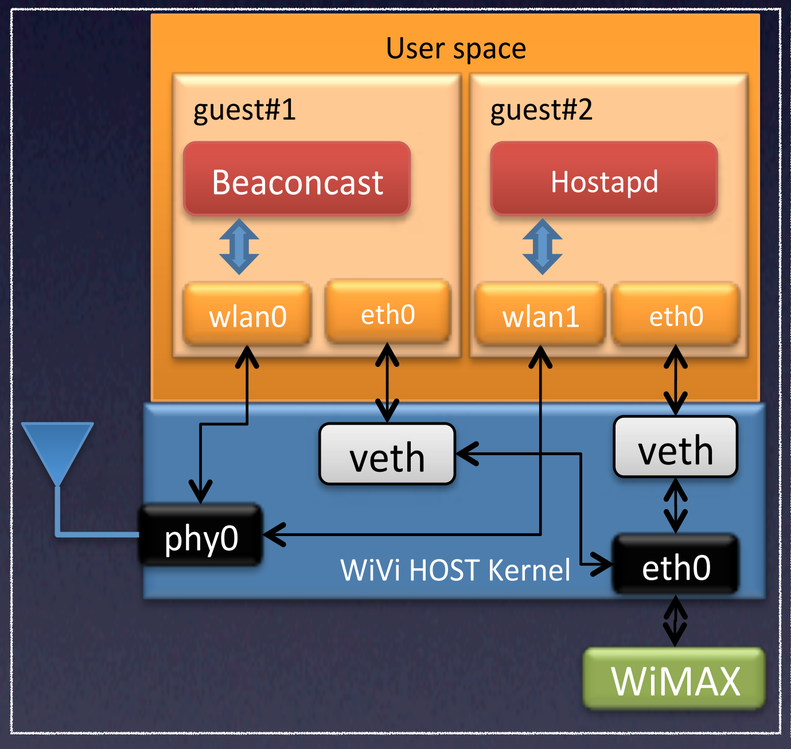

WiVi Node
- Linux based WiFi Access Point
- Virtualized to have multiple slices
- Backhaul provided by WiMAX, 3G and LTE
- MIC Certified Equipment
- Remotely Controlled
- Power Consumption: 100V 9W idle; 24W in operation
- Required Space: 10x10cm^2

BeaconCast

BeaconCast (Information Push via SSIDs in WiFi beacons)
- Information may be disseminated to a large number of receivers concurrently without authentication
- SSIDs of multiple beacons are combined via erasure code to disseminate a large amount of information
- Data of several hundreds of KB may be disseminated within several seconds to hundreds of smartphones
- Suitable for information push services
  - Digital Signage
  - Emergency Evacuation Information Dissemination

文部科学省 MINISTRY OF EDUCATION, CULTURE, SPORTS, SCIENCE AND TECHNOLOGY-JAPAN

Contact: NakaoLab@The University of Tokyo
info@nakao-lab.org

THE UNIVERSITY OF TOKYO

Acknowledgement : This research is supported by MEXT (Ministry of Education, Culture, Sports, Science and Technology) in Japan